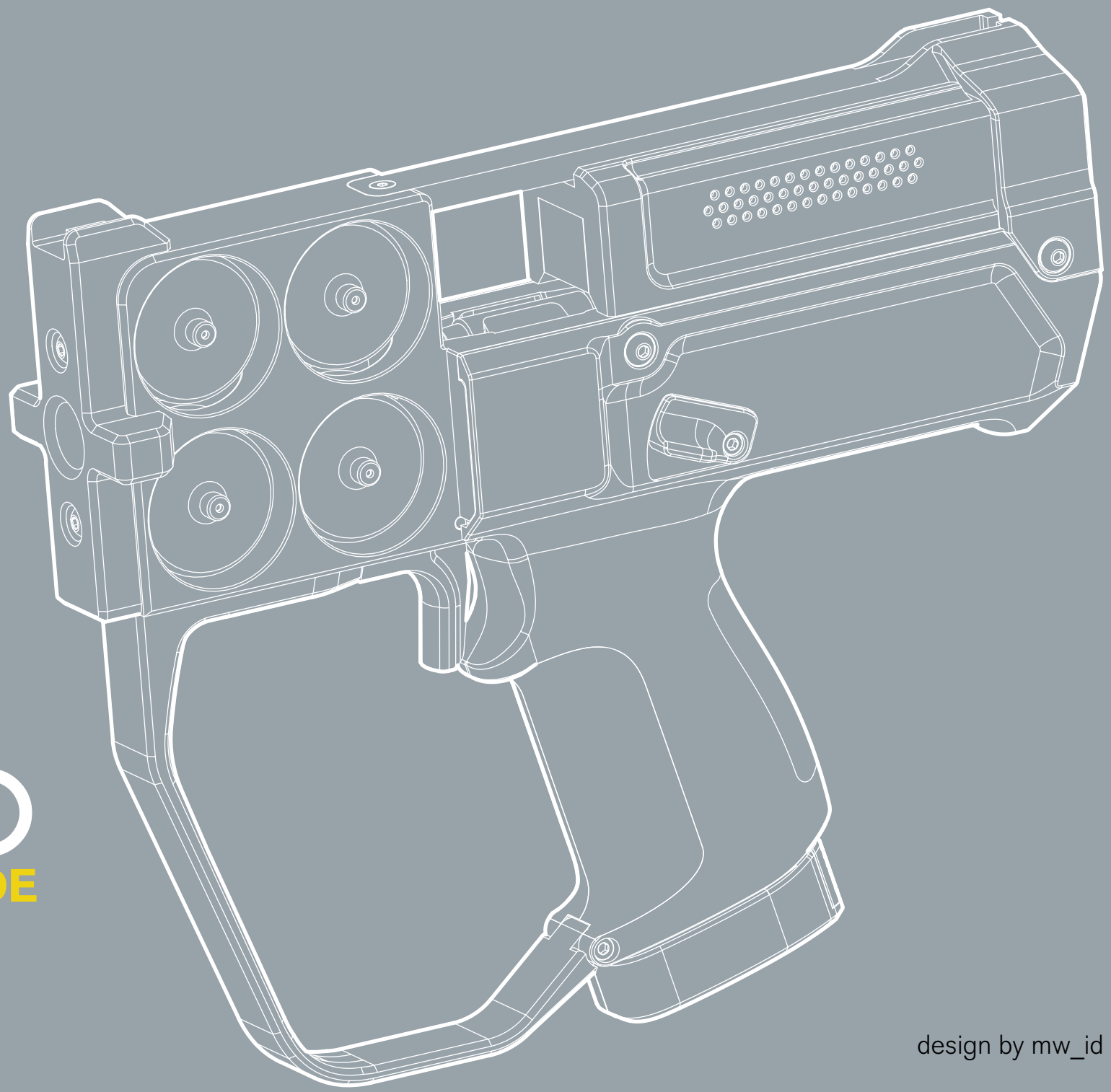

TARO
ASSEMBLY GUIDE

revision 1.0

design by mw_id

01 bill of materials

02 print orientation + notes

03 wiring

04 assembly

01 bill of materials

Item	Purpose	Qty	Source	Part Number
Nerf Parts				
Talon Magazine, Angled	Dart Feeding Source	1		
Flywheel, Full Size	Propulsion	4		
130 Motor (3s Rated)	Propulsion	4		
Graphene 0.95 Ah 3s LiPo Battery	Power	1	Out of Darts	
Electronics				
IRLB3034 MOSFET	Driver/Switching	3	DigiKey	IRLB3034PBF-ND
IN4001 Diode	Backfeed Circuit Protection	4	DigiKey	1N4001G-T
Resistor, 10k ohm	MOSFET Pull Down	2	DigiKey	A105986CT-ND
Solenoid, 35mm	Dart Feeder	1		
NKK M2013TNW01-DA Rocker Switch	Fire Selector	1	DigiKey	360-2256-ND
Omron D2F 01FL D3	Flywheel Trigger Switch	1	DigiKey	Z4700-ND
Cherry DB2 10A	Solenoid Trigger Switch	1	DigiKey	CH886-ND
XT60 Female Connector	Battery Connector	1	DigiKey	1568-1816-ND
Arduino Nano Every	Blaster Controller	1	DigiKey	1050-ABX00028-ND
16 AWG wire, Silicone	Wiring, Solenoid + Motor			
22 AWG wire, Silicone	Wiring, Arduino + Switches			
Springs				
Solenoid Spring	Solenoid Spring Upgrade	1	Lee Spring	LP 035KL 05S316
Torsion Spring	Trigger Return Spring	1	McMaster	9271K94
Compression Spring	Magazine Release Spring	1	McMaster	9657K618s
Fasteners				
Screw, M2x6mm	Flywheel Motor Mounting	8	McMaster	92095A453
Heat Set Insert, M3x4.3mm	Mounting - Trigger Guard, Magazine Release Lever, Slide Standoff, Battery Door	6	McMaster	94459A130
Screw, Flat Head, M3x8mm	Mounting - Slide Standoff	1	McMaster	91294A128
Screw, Socket Head, M3x18mm	Trigger Guard Screw Mounting	1	McMaster	91290A121
Screw, Socket Head, M3x45mm	Magazine Release Lever	1	McMaster	91292A024
Thumbscrew, M3	Battery Door Mounting	1	McMaster	92552A411
Heat Set Insert, M4x4.7mm	Mounting - Main Chassis, Grip Frame, Muzzle Cap, Dart Striker	7	McMaster	94180A351
Screw, Flat Head, M4x6mm	Solenoid Mounting	4	McMaster	92125A186
Screw, Button Head, M4x8mm	Mounting - Grip Frame, Muzzle Cap, Dart Striker	7	McMaster	92095A189
Screw, Self Tapping, #1x3/8”	Flywheel Switch Mounting	2	McMaster	99461A620
Screw, Self Tapping, #2x1/8”	Selector Switch Mounting	2	McMaster	92525A102
Screw, Self Tapping, #1x3/8”	Solenoid Switch Mounting	2	McMaster	99461A725
Dowel Pin, Stainless,. 3mm Ø x 28mm	Trigger Pivot	1	McMaster	93600A405

01 bill of materials

#2 x 1/8" Self Tapping Screw

x2

#2 x 3/8" Self Tapping Screw

x2

#1 x 3/8" Self Tapping Screw

x2

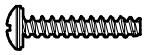

M2 x 6mm

x8

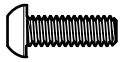

M3 x 8mm

x1

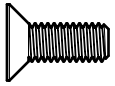

M3 x 18mm

x1

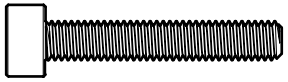

M4 x 6mm

x4

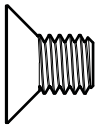

M4 x 8mm

x7

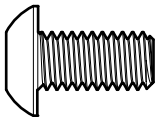

M3 x 40mm

x1

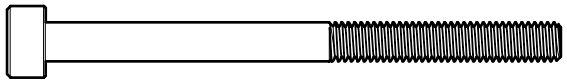

M3 x 4.3mm Threaded Insert

x3

M4 x 4.7mm Threaded Insert

x7

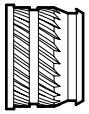

M3 x 6mm Thumbscrew

x1

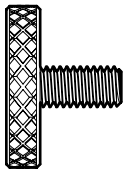

3mm Ø x 28mm Dowel Pin

x1

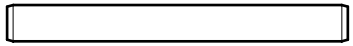

Magazine Release Spring

x1

Trigger Reset Spring

x1

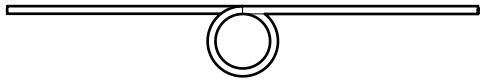

Solenoid Upgrade Spring

x1

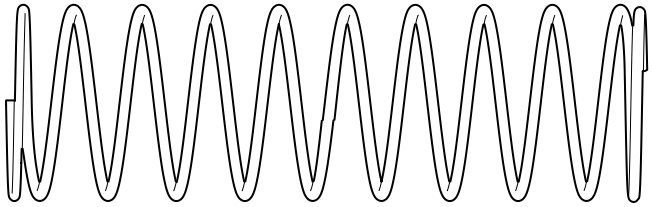

01 bill of materials

Omron D2F 01FL D3 SPDT Switch

x1

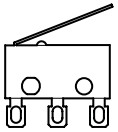

Cherry DB2 10A SPDT Switch

x1

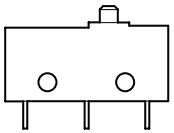

100µF 25v Capacitor

x1

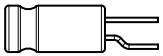

10K Ohm Resistor

x2

IN4001 Diode

x4

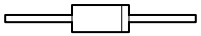

XT60 Female Connector

x1

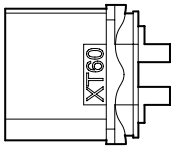

NKK M2013TNW01-DA

x1

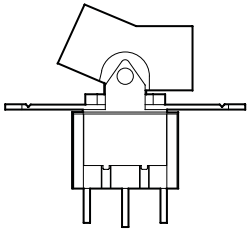

IRLB3034 MOSFET

x3

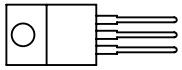

130 Motor

x4

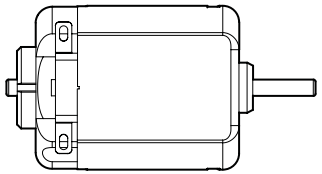

Arduino Nano Every

x1

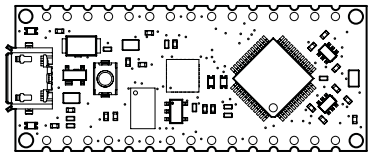

35mm Solenoid

x1

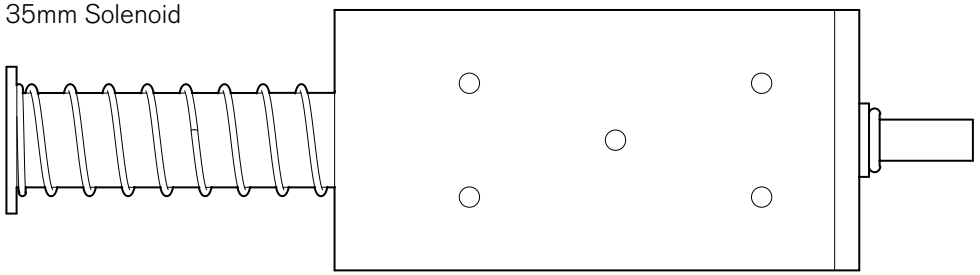

Turnigy Graphene 950mAh 65c 3s LiPo Battery, XT-60 connector (equivalent or smaller)

x1

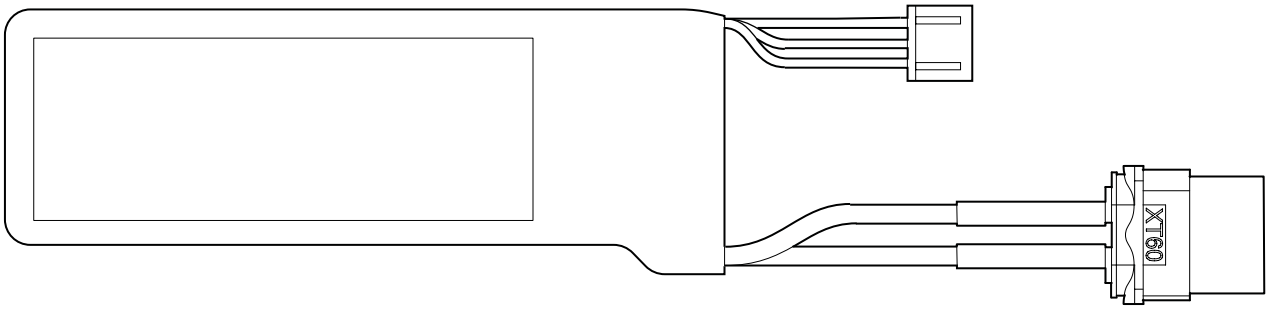

02 print orientation + notes

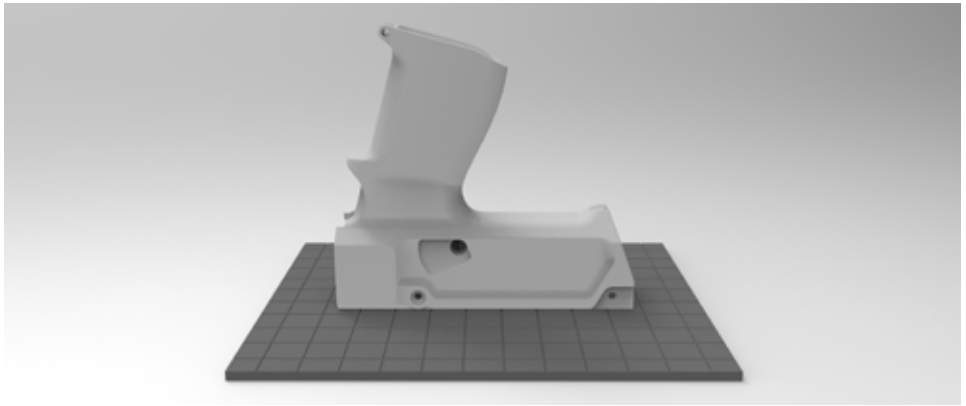

Grip Frame
0.1-0.2 mm Layer Height
3+ Walls
20+% Infill
Brim Necessary

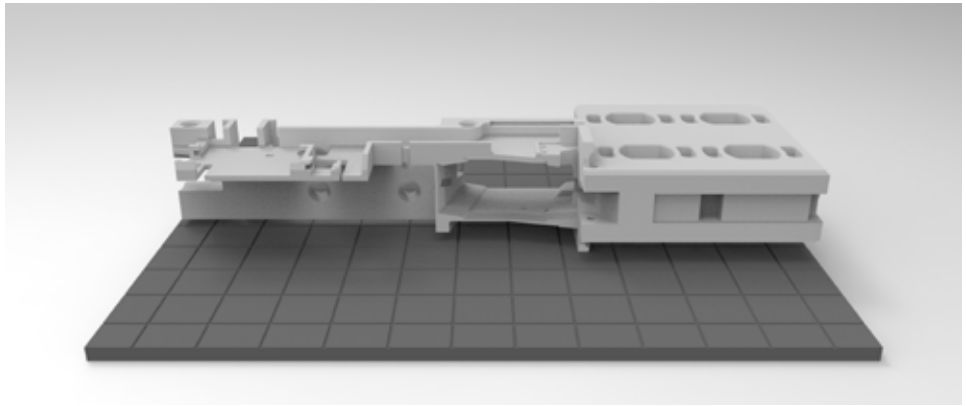

Main Chassis
0.2 mm Layer Height
3+ Walls
20+% Infill
Brim Optional

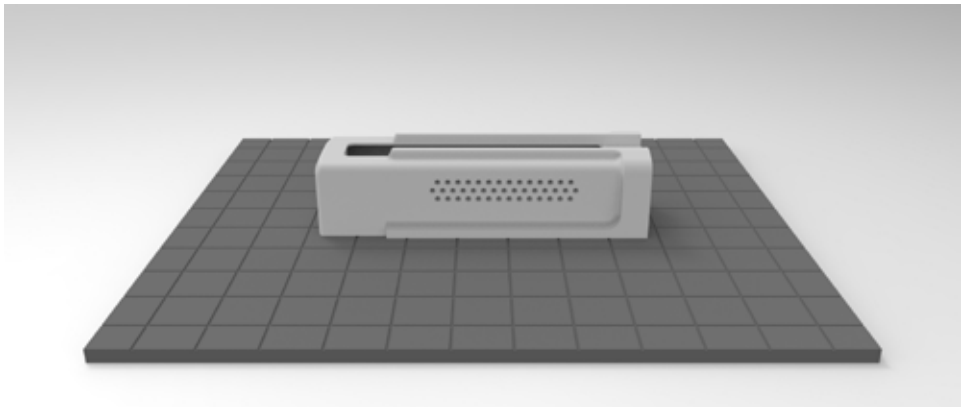

Slide
0.1-0.2 mm Layer Height
2-4 Walls
20+% Infill
Brim Necessary

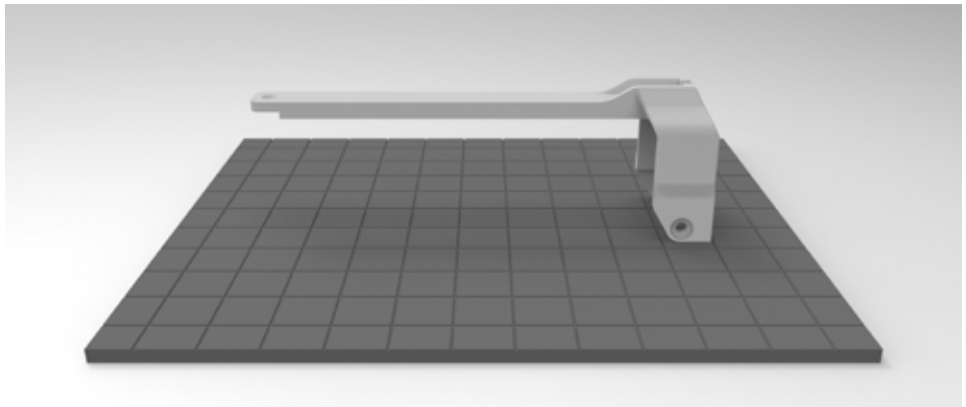

Slide Standoff Sight Rail
0.1-0.2 mm Layer Height
3+ Walls
20+% Infill
Brim Optional

02 print orientation + notes

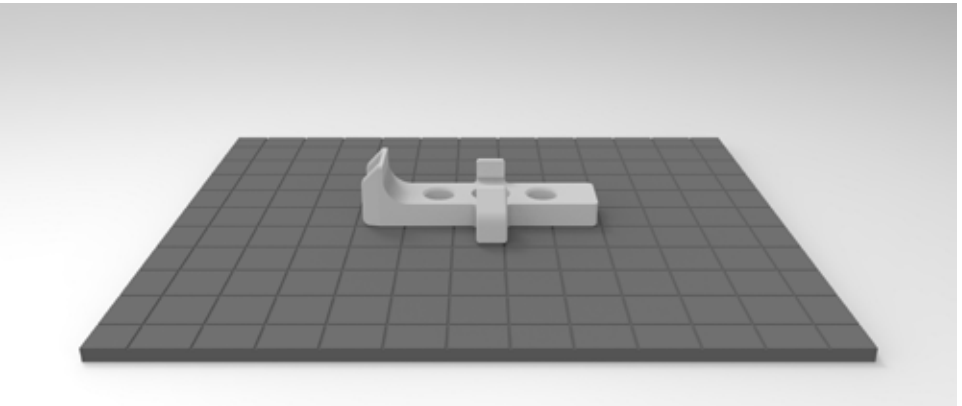

Muzzle Cap
0.1-0.2 mm Layer Height
3+ Walls
20+% Infill
Brim Optional

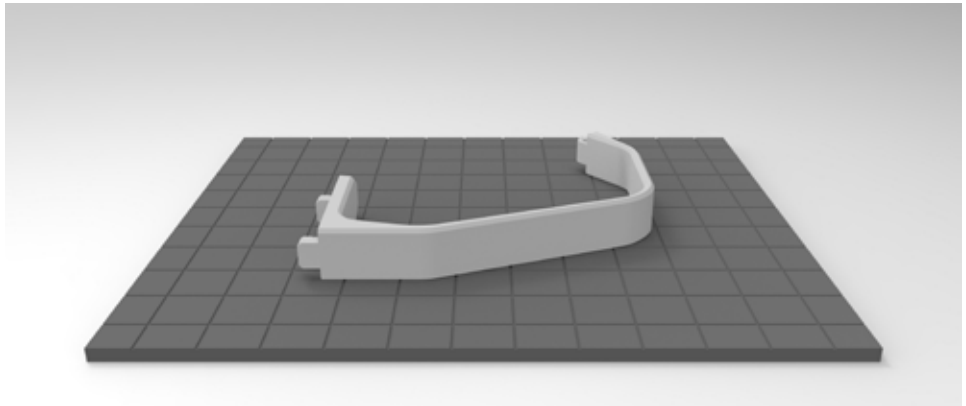

Trigger Guard
0.2 mm Layer Height
3+ Walls
20+% Infill
Brim Optional

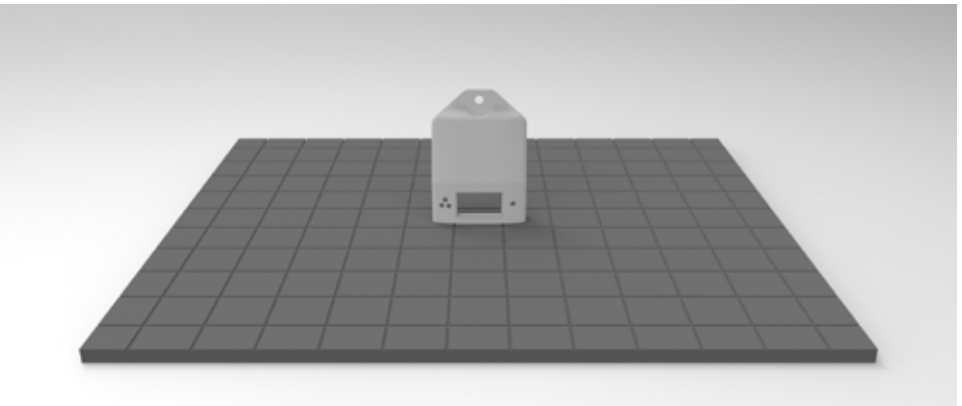

Battery Door
0.1-0.2 mm Layer Height
3+ Walls
20+% Infill
Brim Necessary

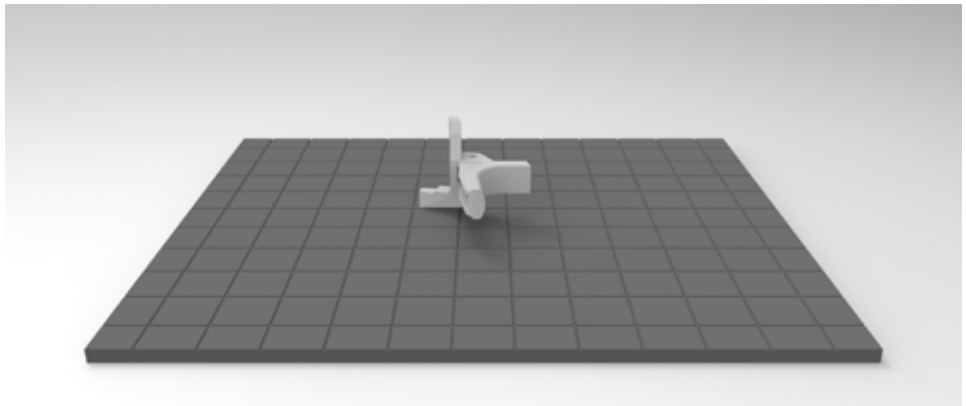

Trigger
0.1-0.2 mm Layer Height
3+ Walls
20+% Infill
Brim Optional

02 print orientation + notes

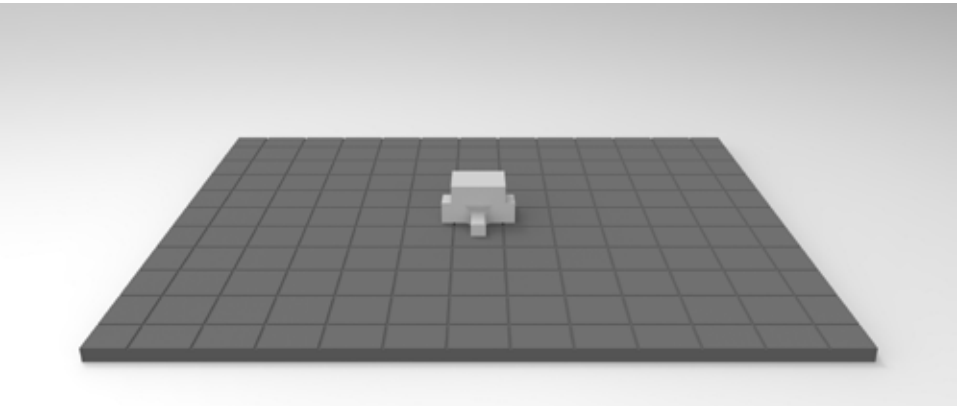

Dart Striker
0.1-0.2 mm Layer Height
3+ Walls
20+% Infill
Brim Optional

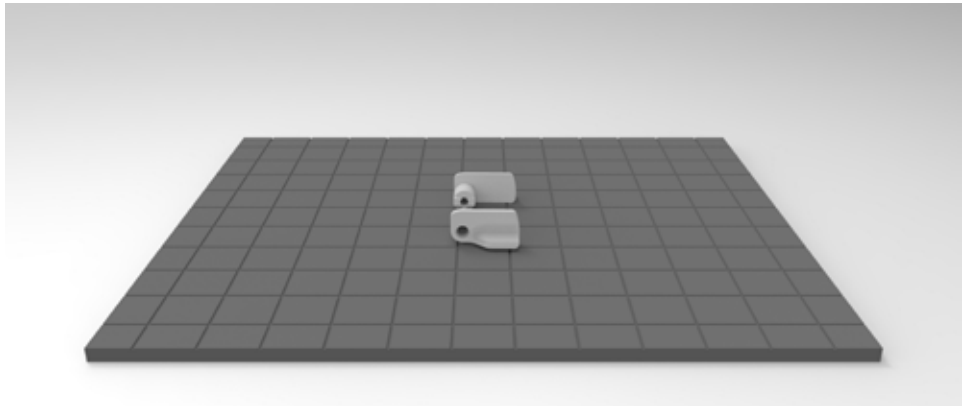

Magazine Release Lever (Left + Right)
0.2 mm Layer Height
3+ Walls
20+% Infill
Brim Optional

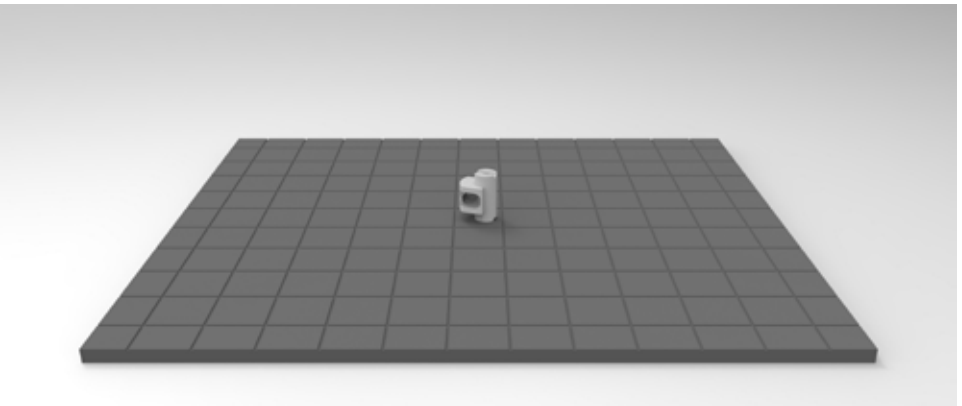

Magazine Release
0.1-0.2 mm Layer Height
3+ Walls
20+% Infill
Brim Optional

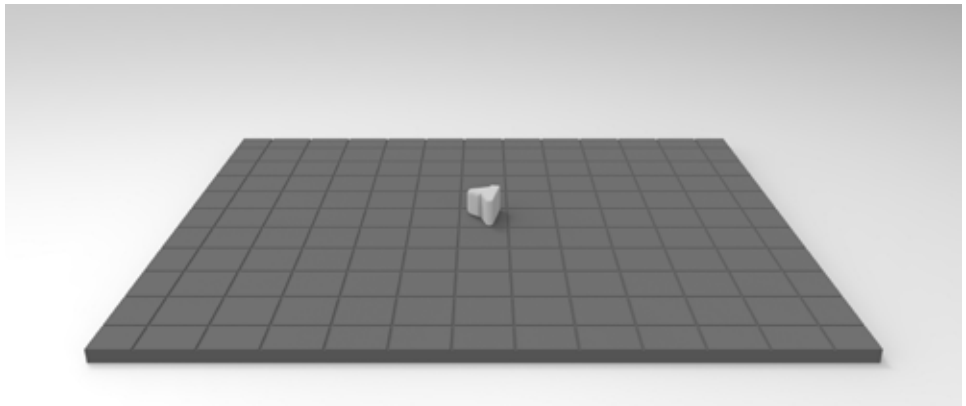

Magazine Catch
0.2 mm Layer Height
3+ Walls
20+% Infill
Brim Optional

ELECTRICAL SCHEMATIC

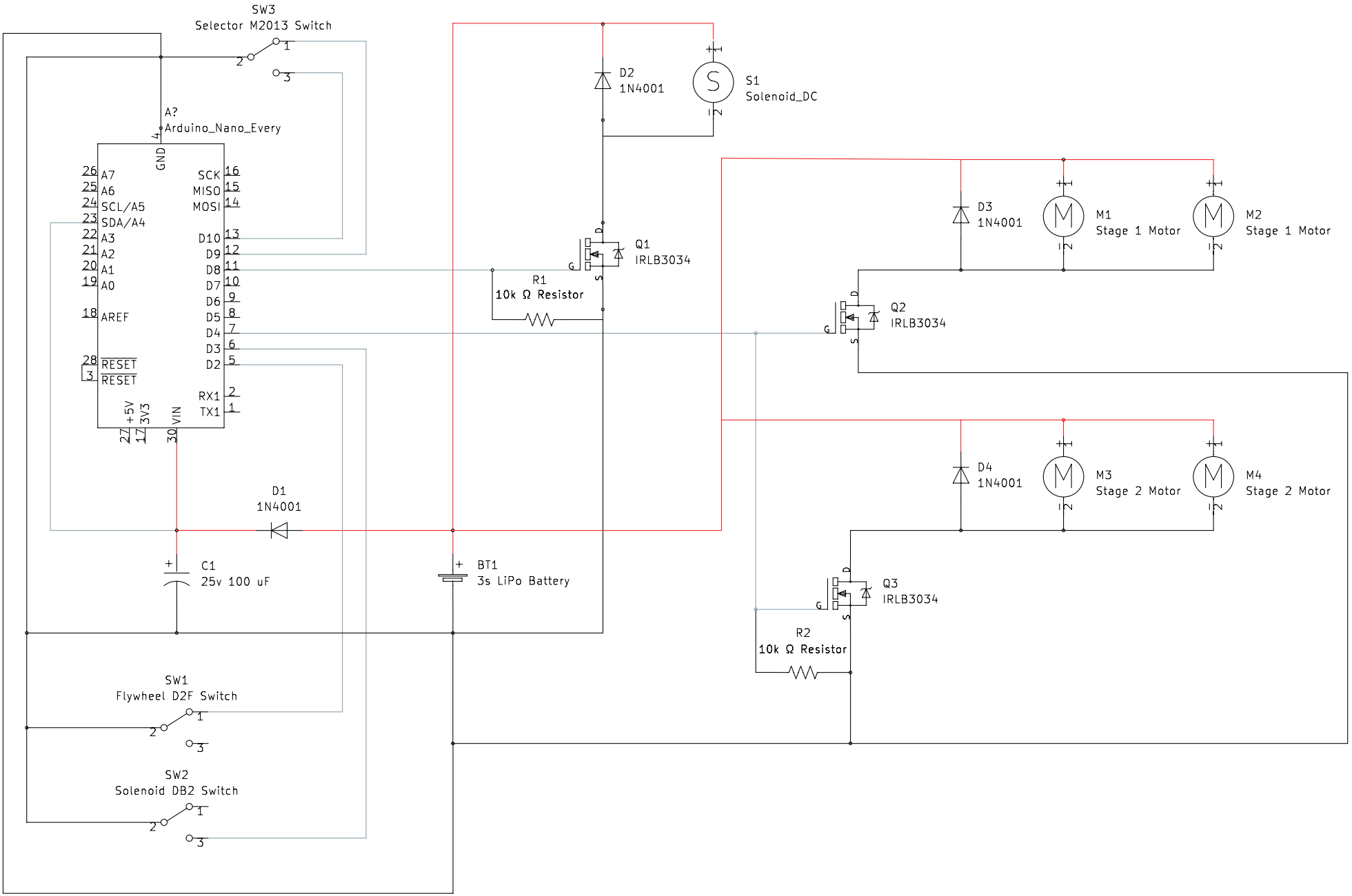

03 wiring

PRE-SOLDERED COMPONENTS

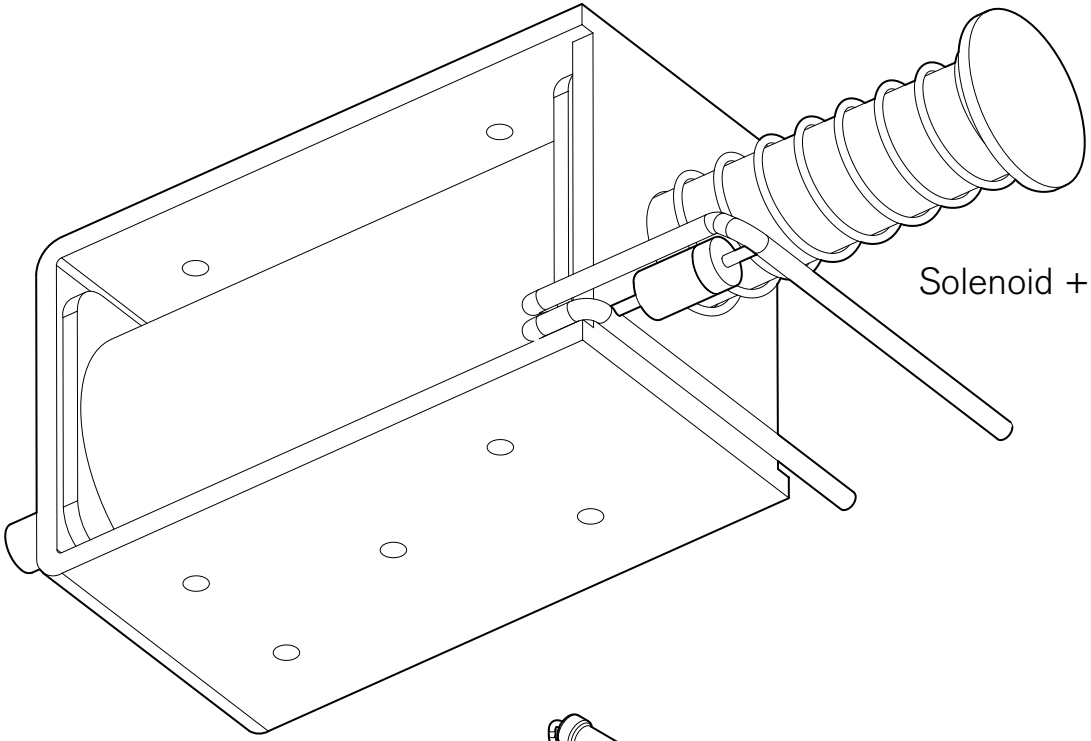

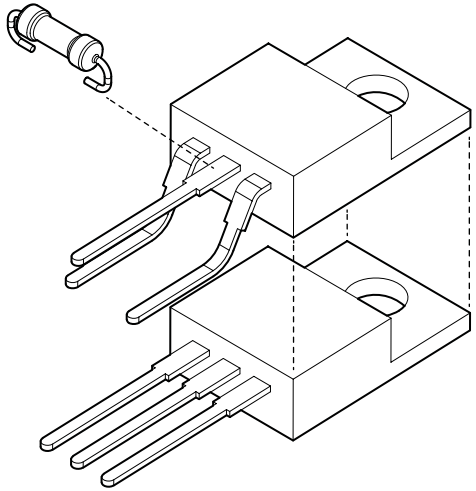

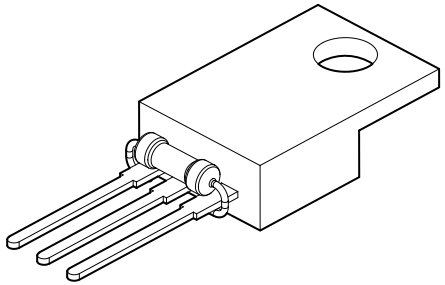

MOSFET assembly for solenoid

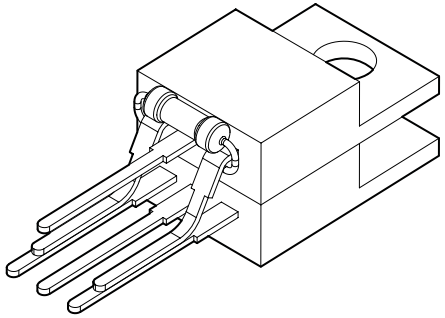

MOSFET assembly for flywheel motors

HARNESS SETUP

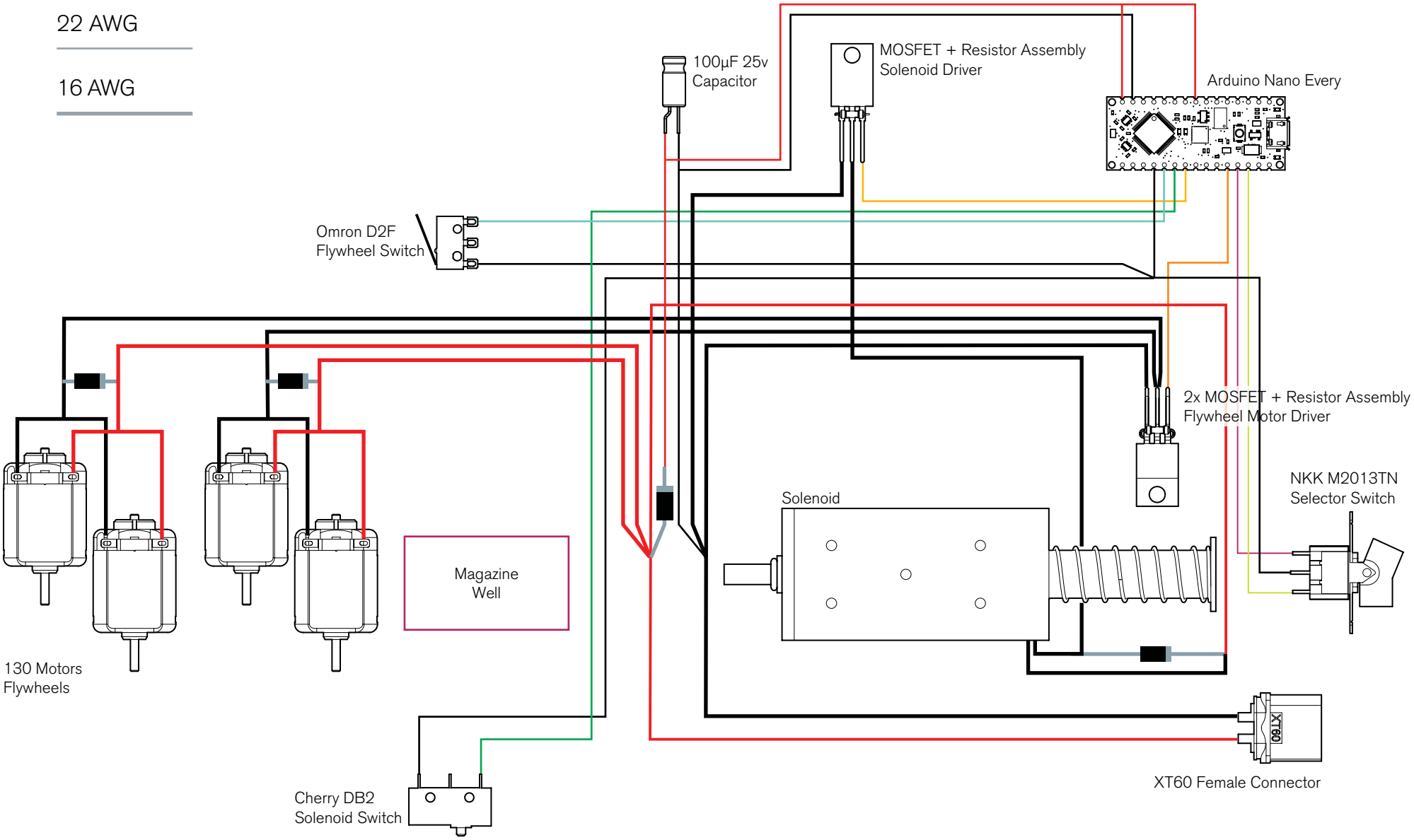

03 wiring

MAIN CHASSIS + DART STRIKER HEAT SET INSERTS

M4 x 4.7mm Threaded Insert

x7

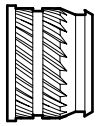

M3 x 4.3mm Threaded Insert

x1

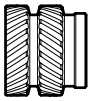

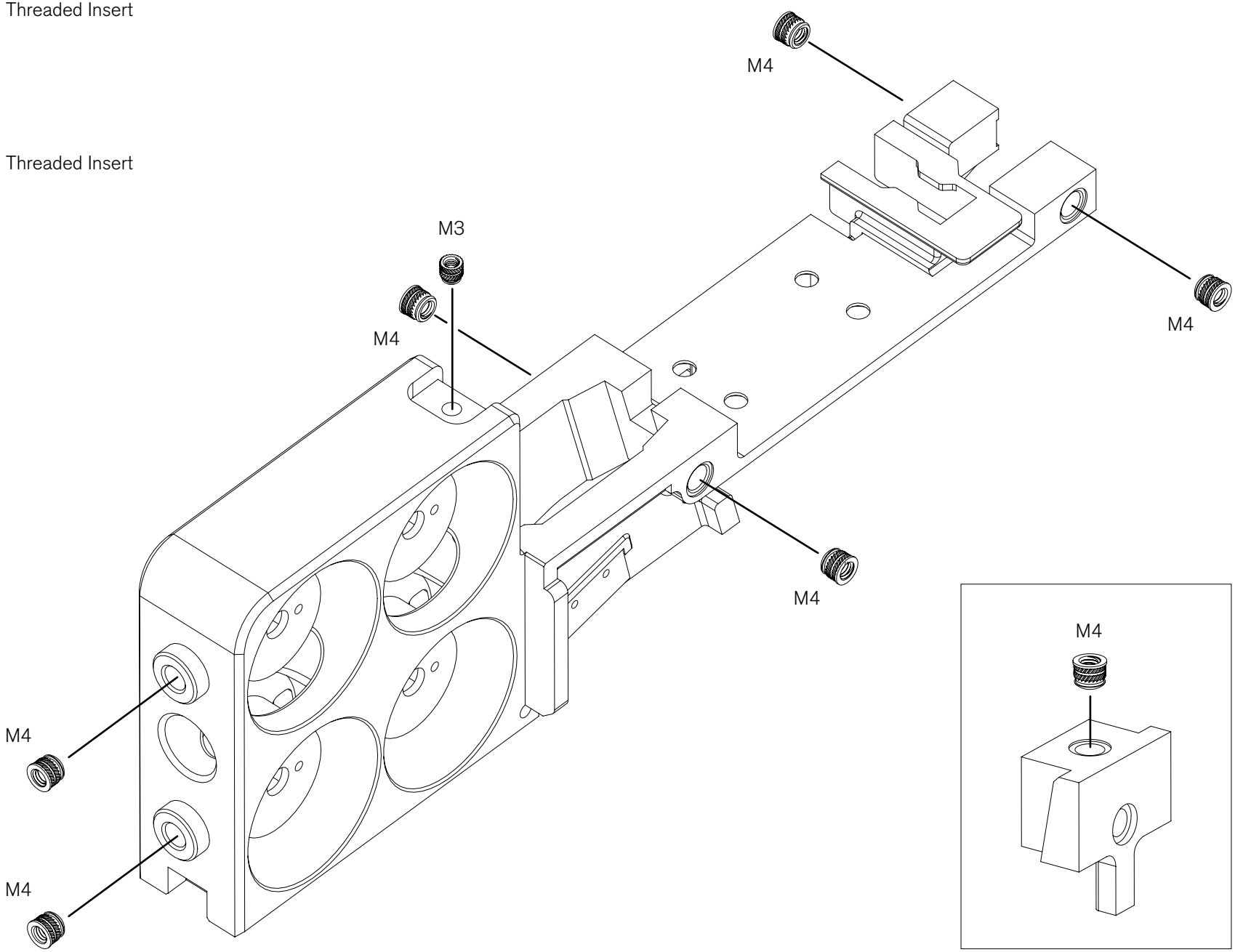

04 assembly

GRIP FRAME + RIGHT MAG RELEASE LEVER HEAT SET INSERTS

M3 x 4.3mm Threaded Insert

x3

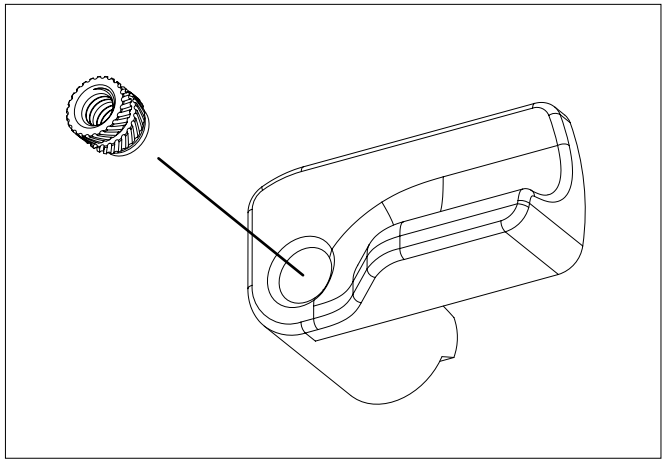

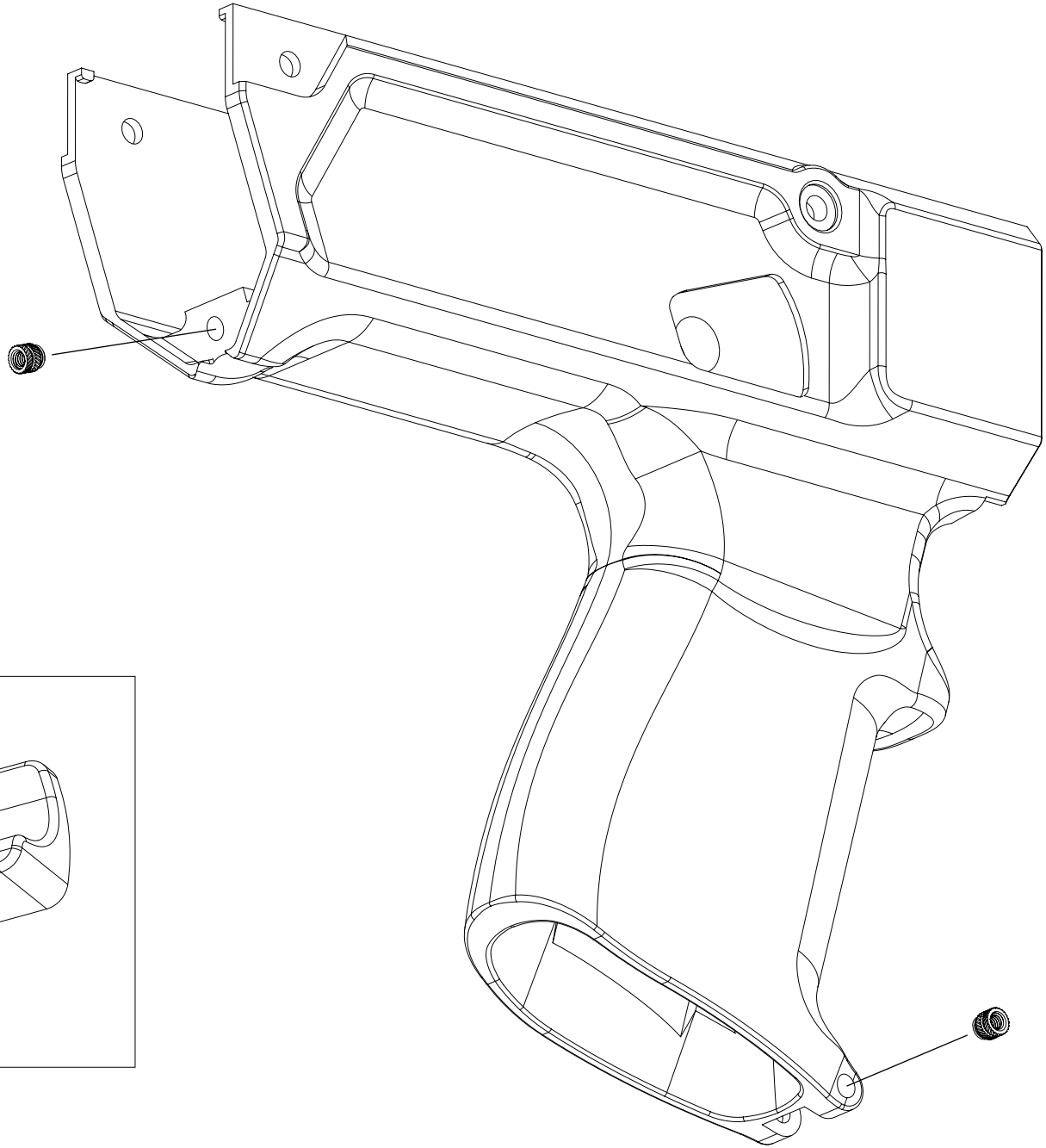

04 assembly

TRIGGER

3mm Ø x 28mm Dowel Pin

x1

Trigger Reset Spring

x1

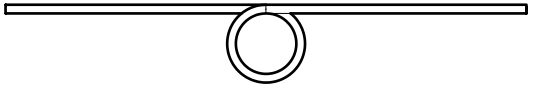

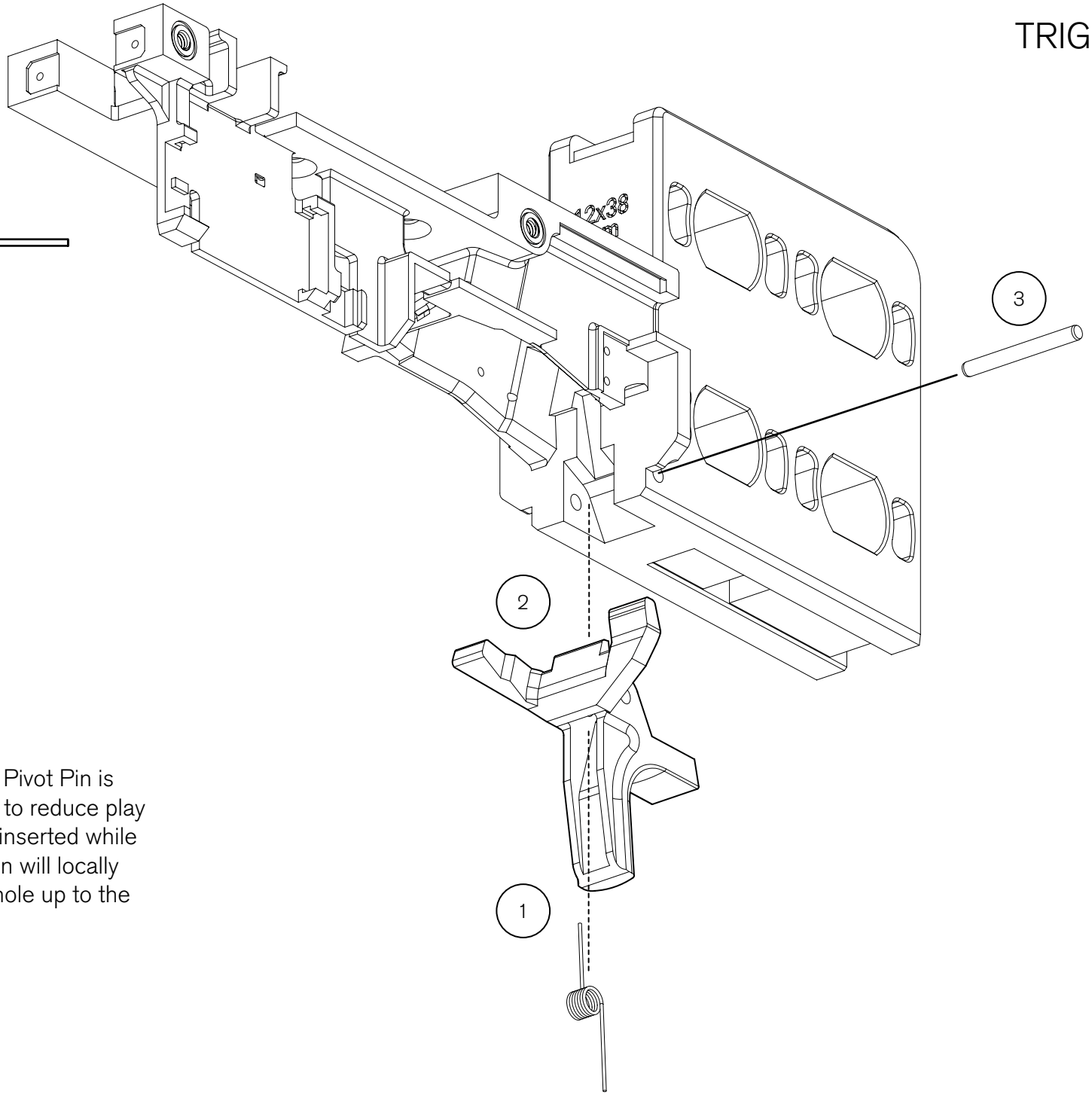

NOTE:

Hole in Main Chassis for Trigger Pivot Pin is slightly undersized to be hand fit to reduce play in the trigger. The pin should be inserted while turning in a hand drill - the friction will locally soften the plastic and open the hole up to the perfect size.

04 assembly

MAGAZINE RELEASE

M3 x 45mm

x1 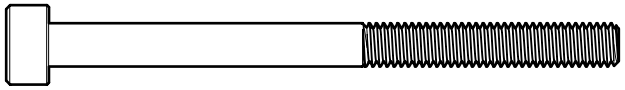

Magazine Release Spring

x1

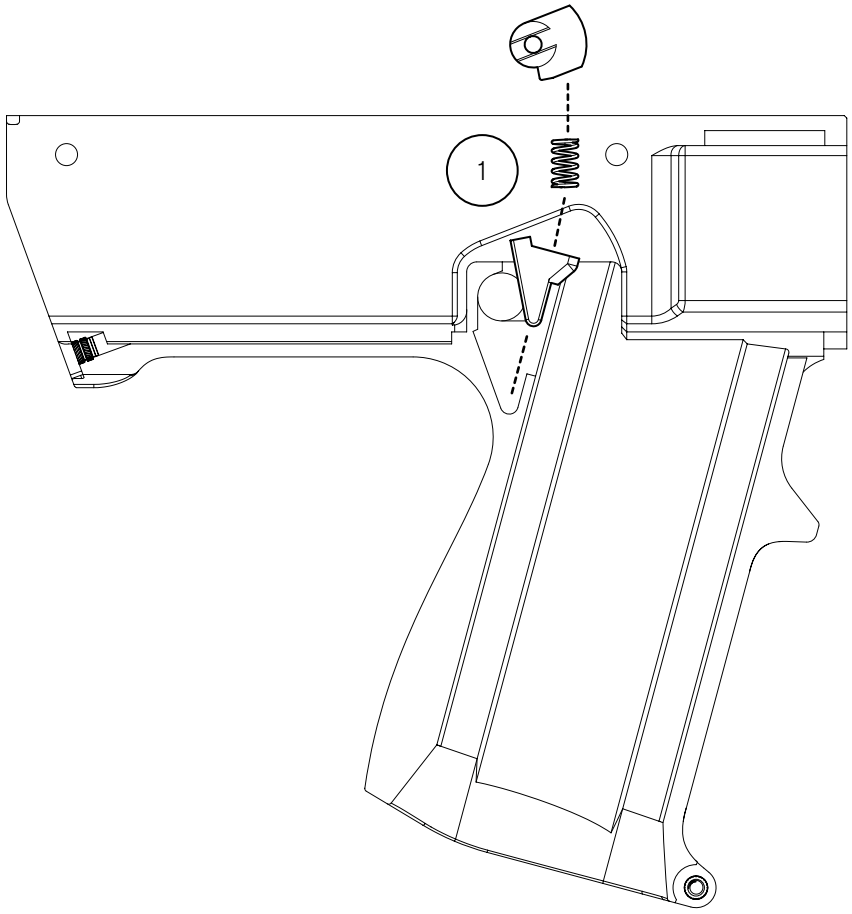

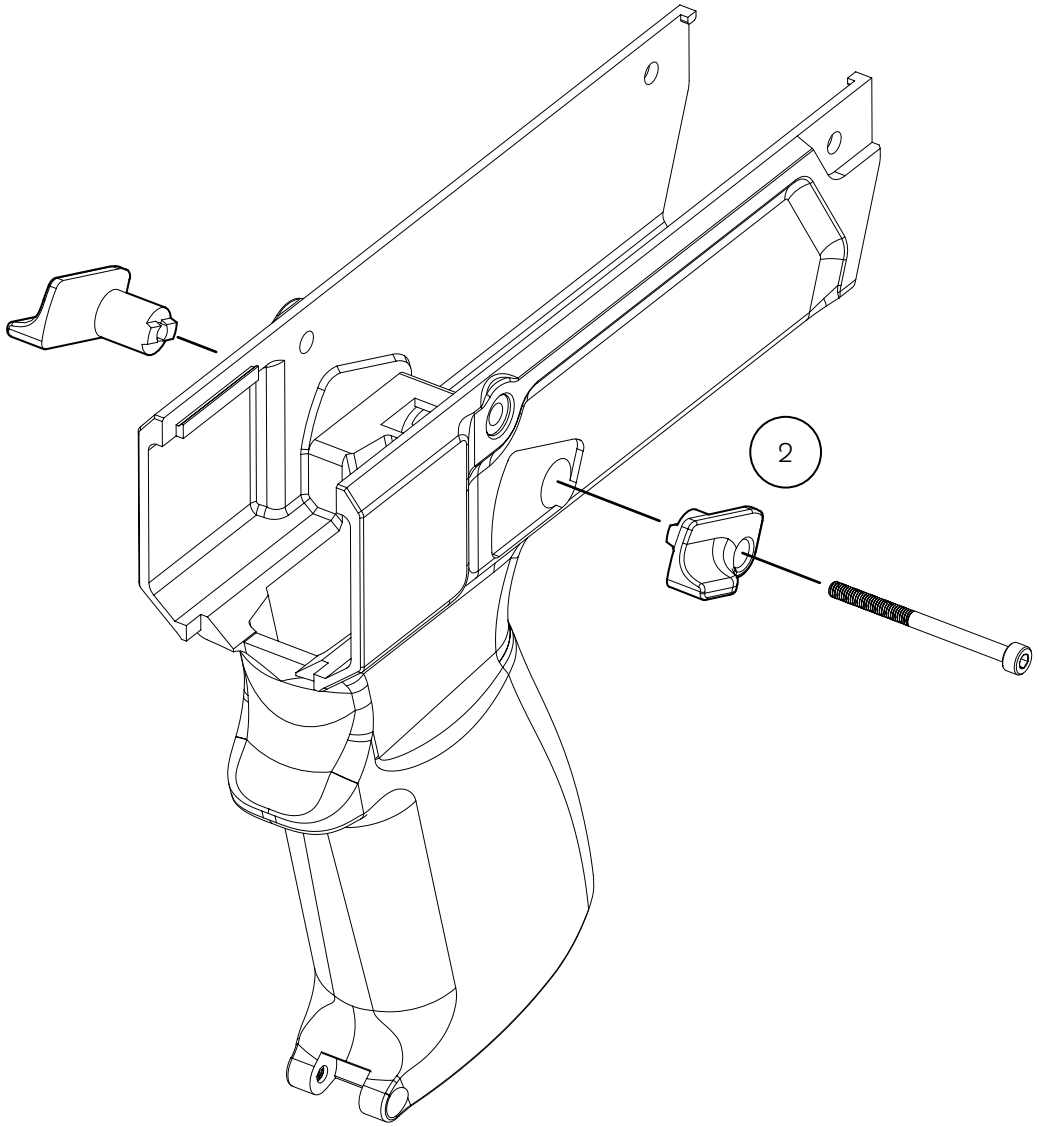

04 assembly

TRIGGER GUARD + MUZZLE CAP

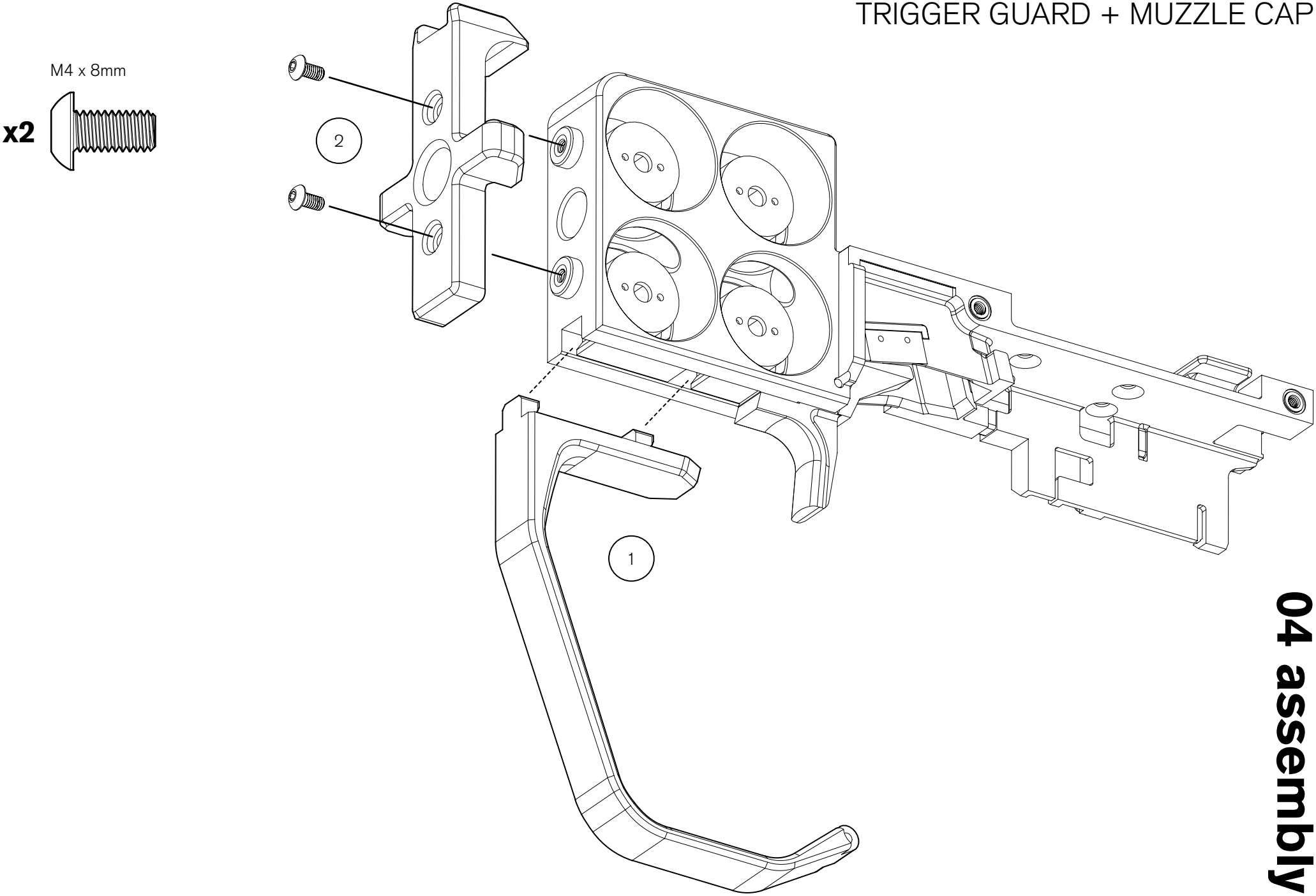

04 assembly

UPGRADING SOLENOID SPRING

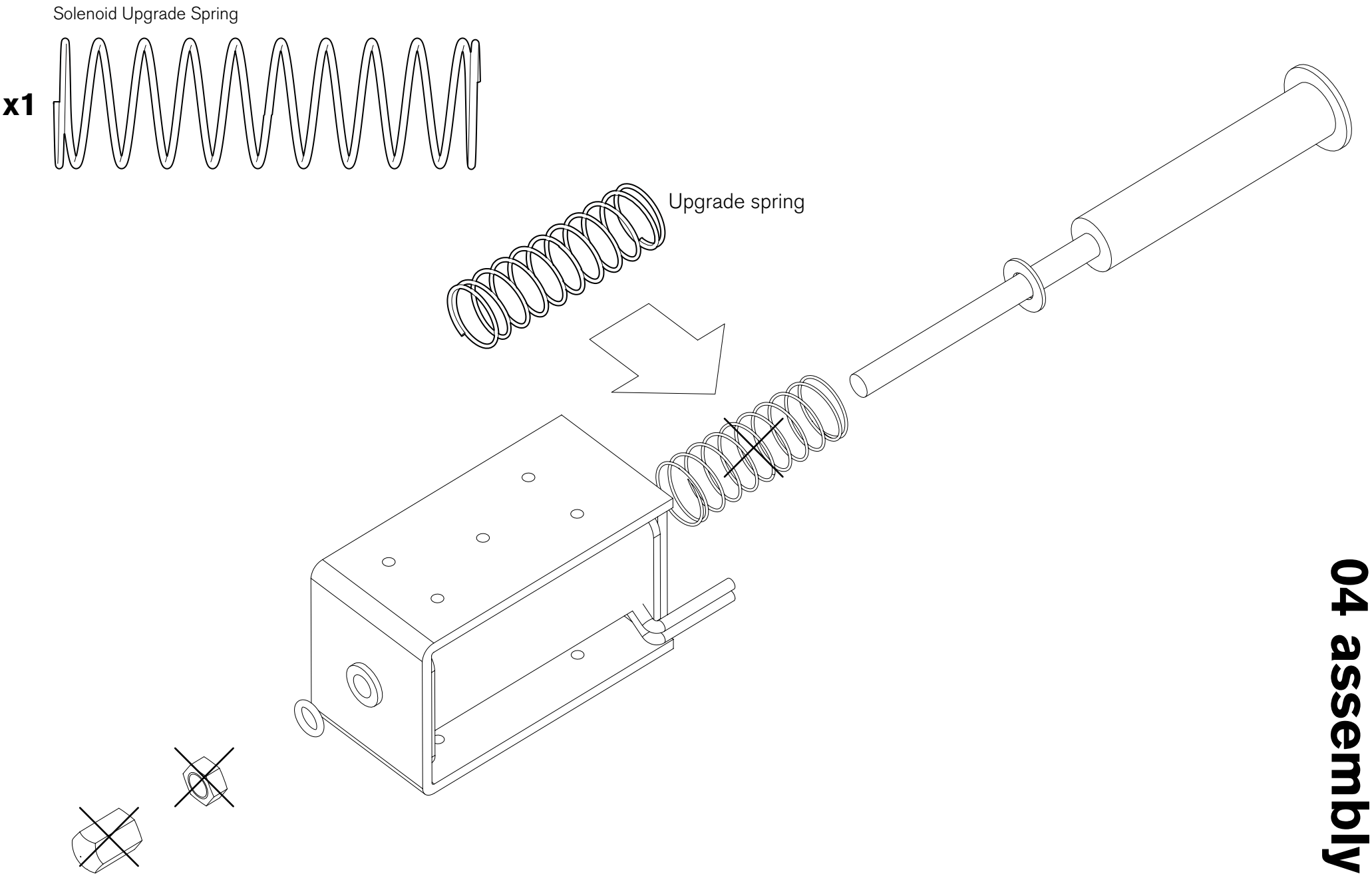

04 assembly

SOLENOID + SOLENOID SWITCH + SELECTOR SWITCH

#2 x 1/8" Self Tapping Screw

x2

#2 x 3/8" Self Tapping Screw

x2

M4 x 6mm

x4

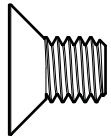

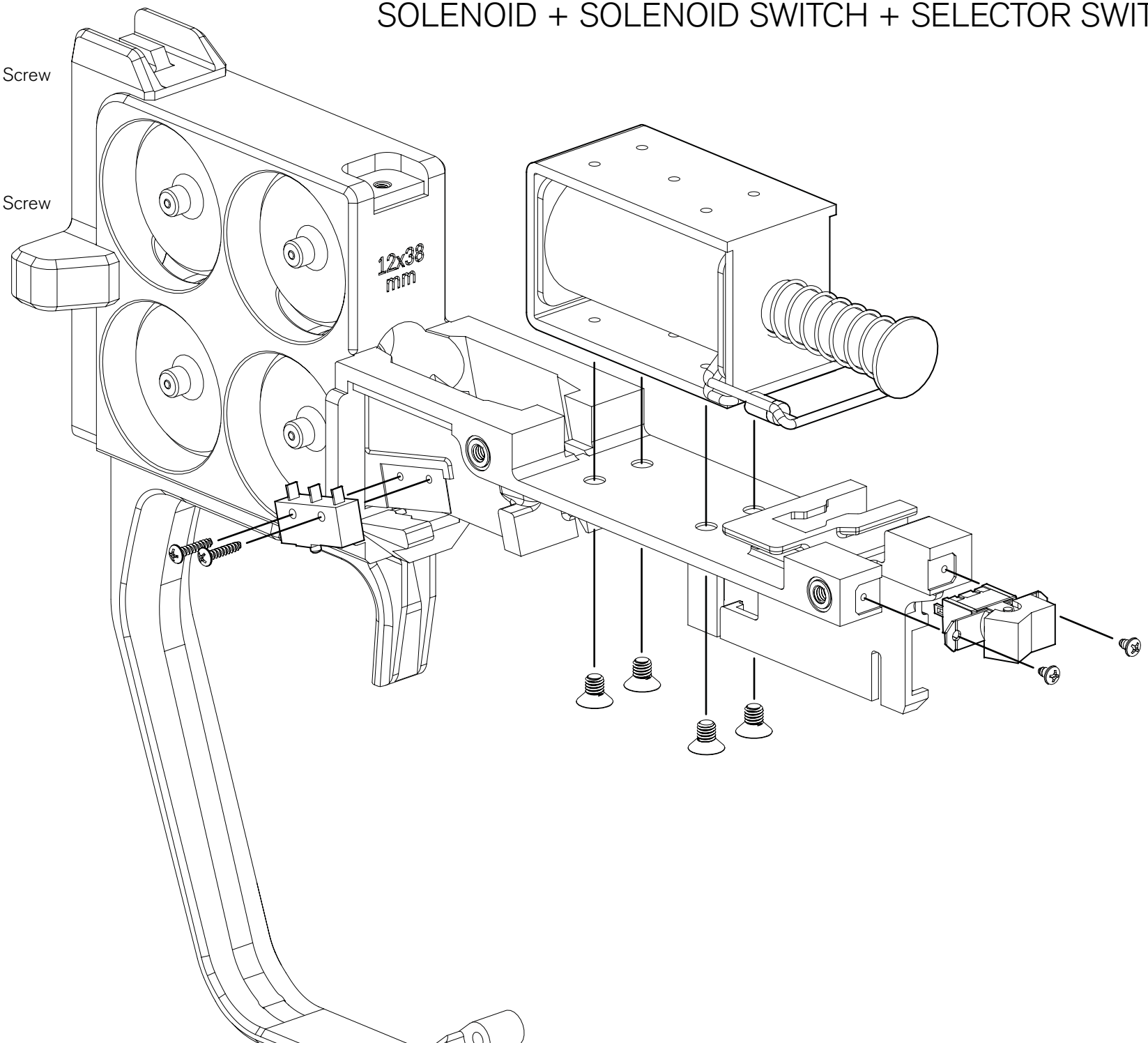

04 assembly

SOLENOID + SOLENOID SWITCH + SELECTOR SWITCH

#1 x 3/8" Self Tapping Screw

x2

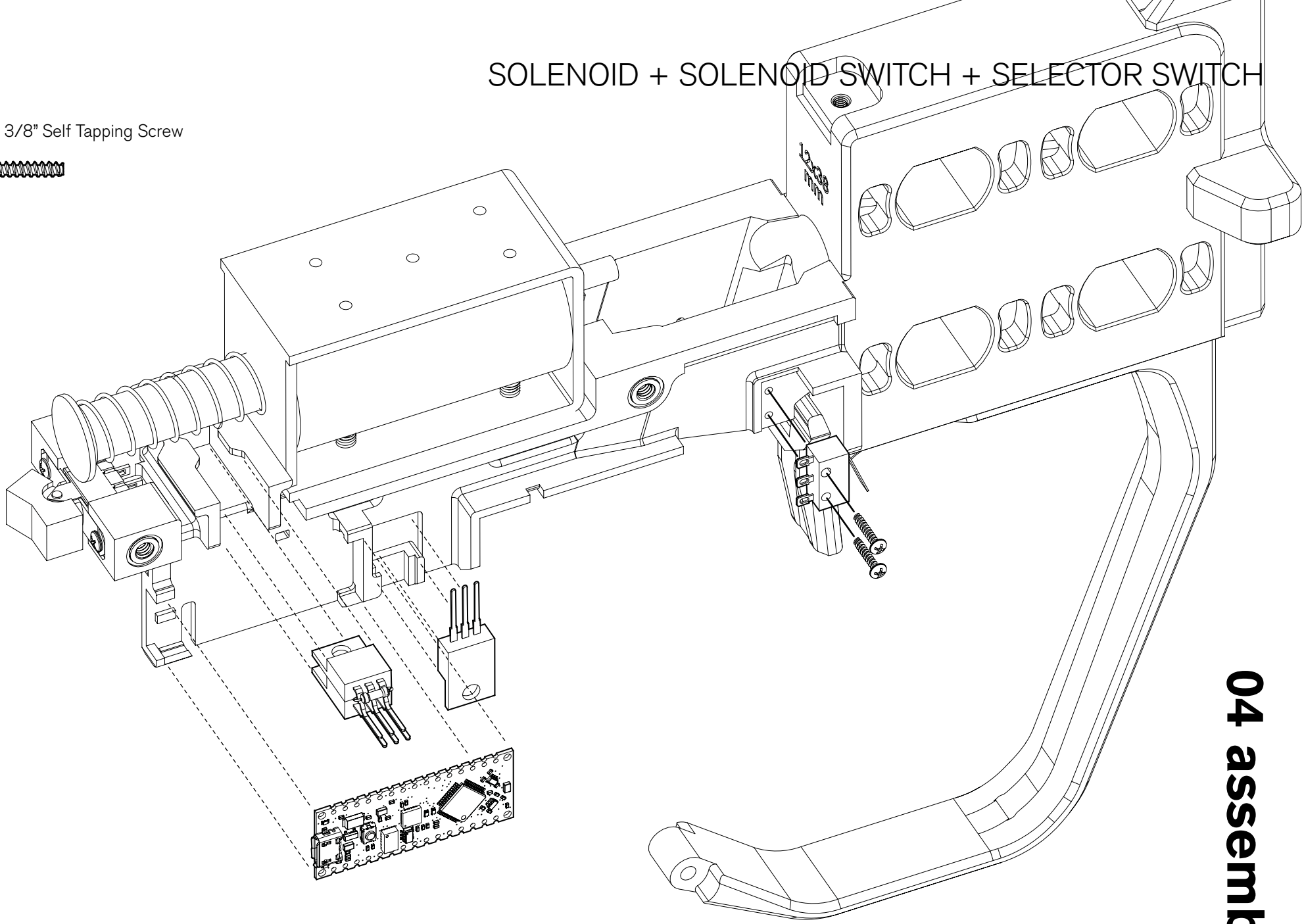

04 assembly

04 assembly

MOTORS + FLYWHEELS

M2 x 6mm

x8

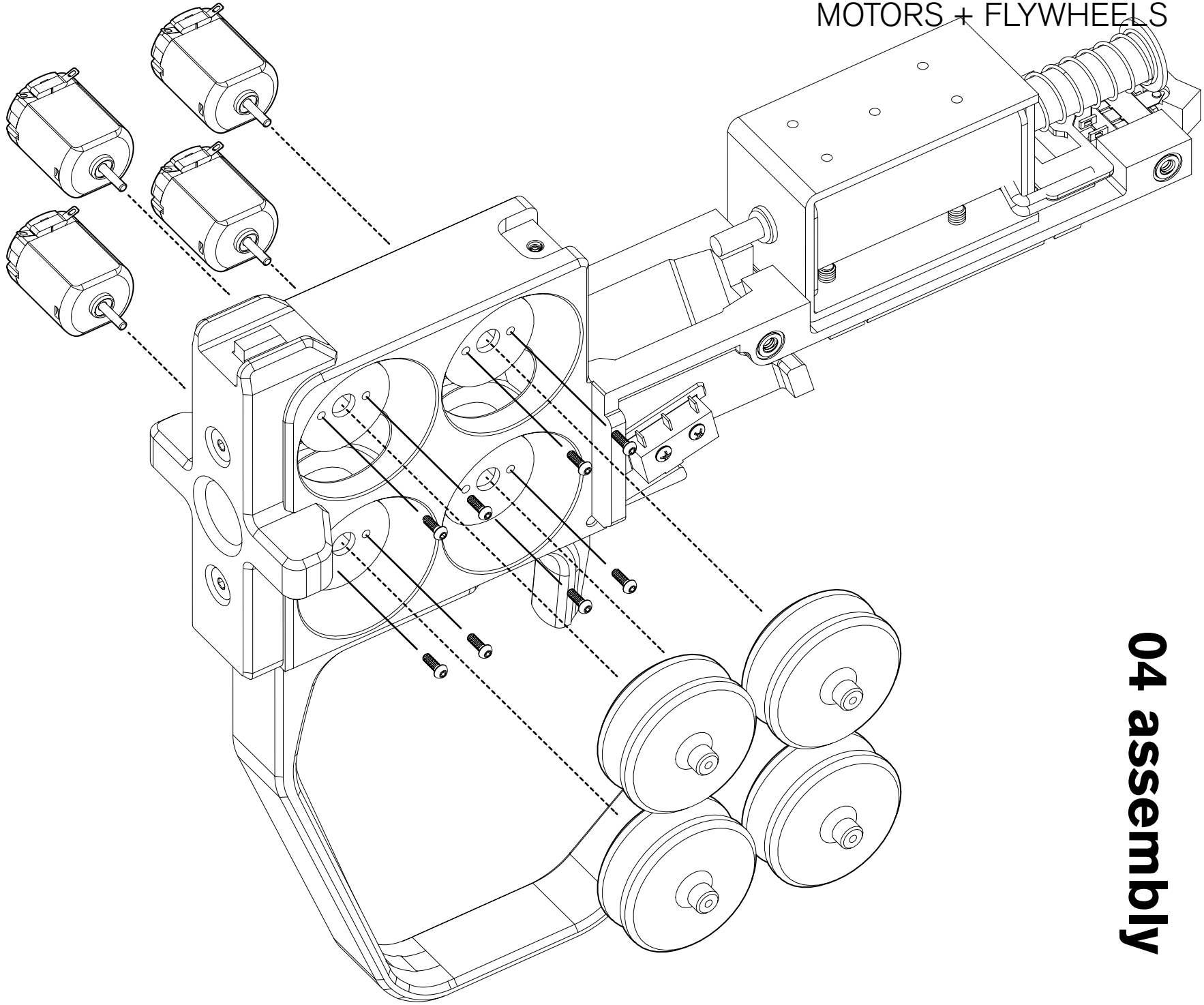

WIRING HARNESS

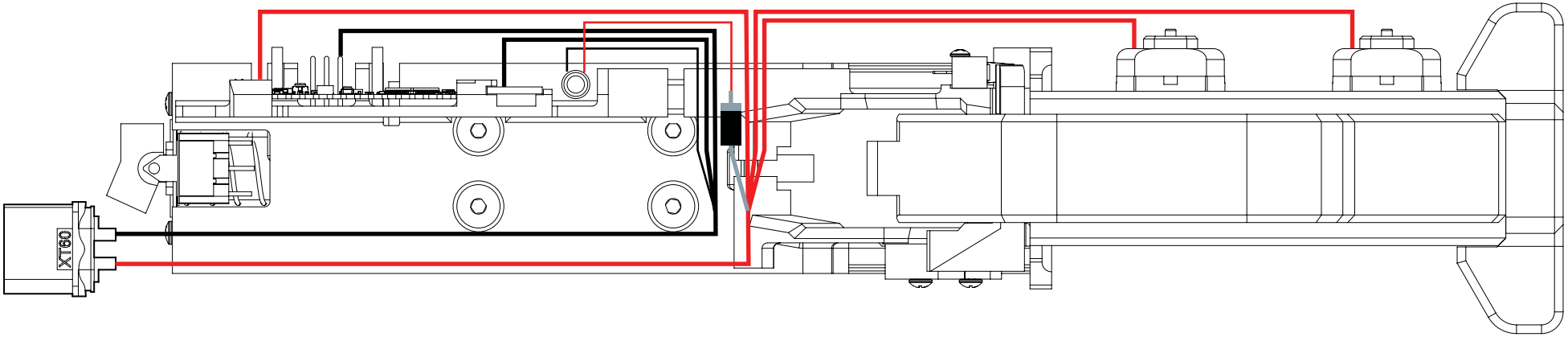

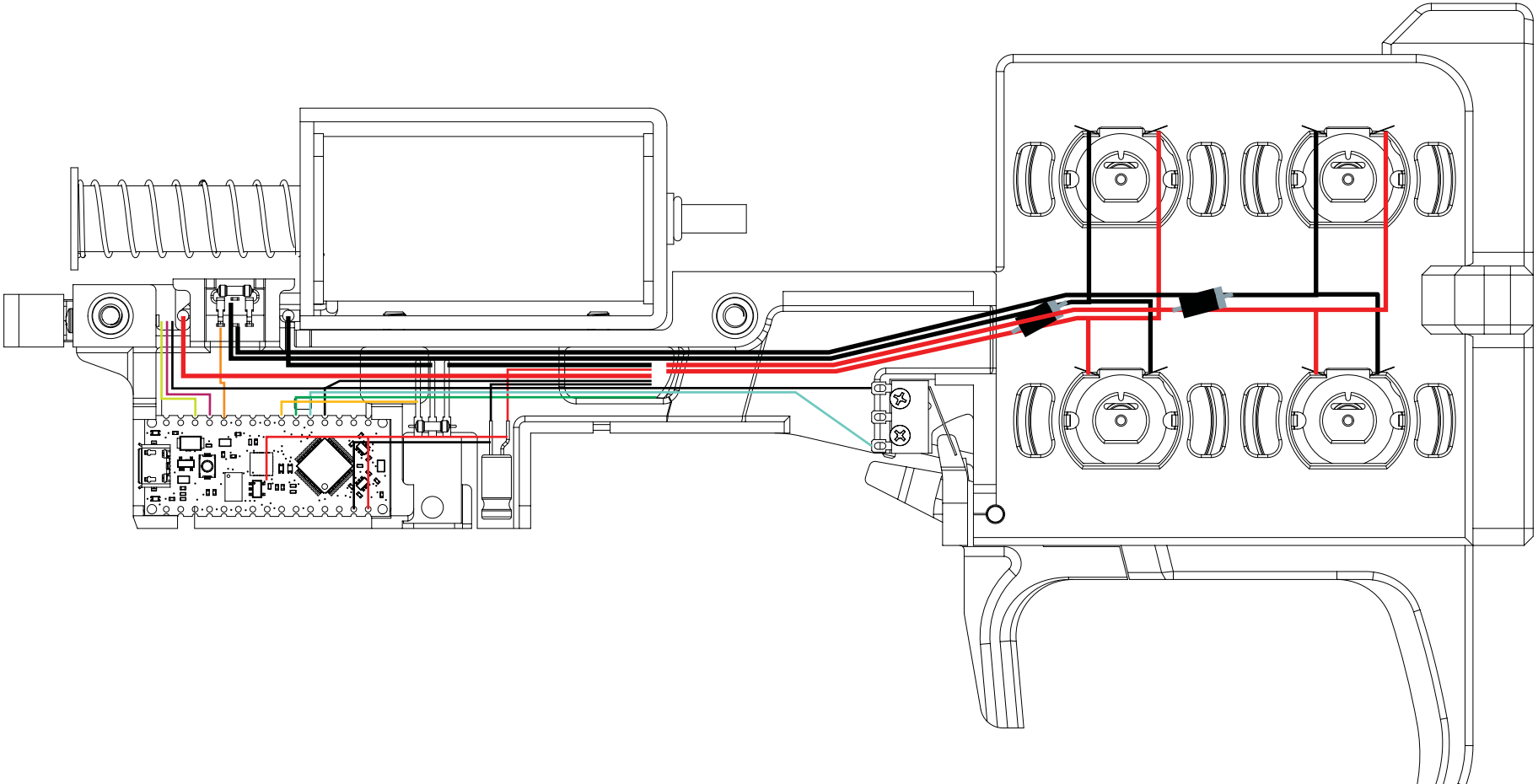

04 assembly

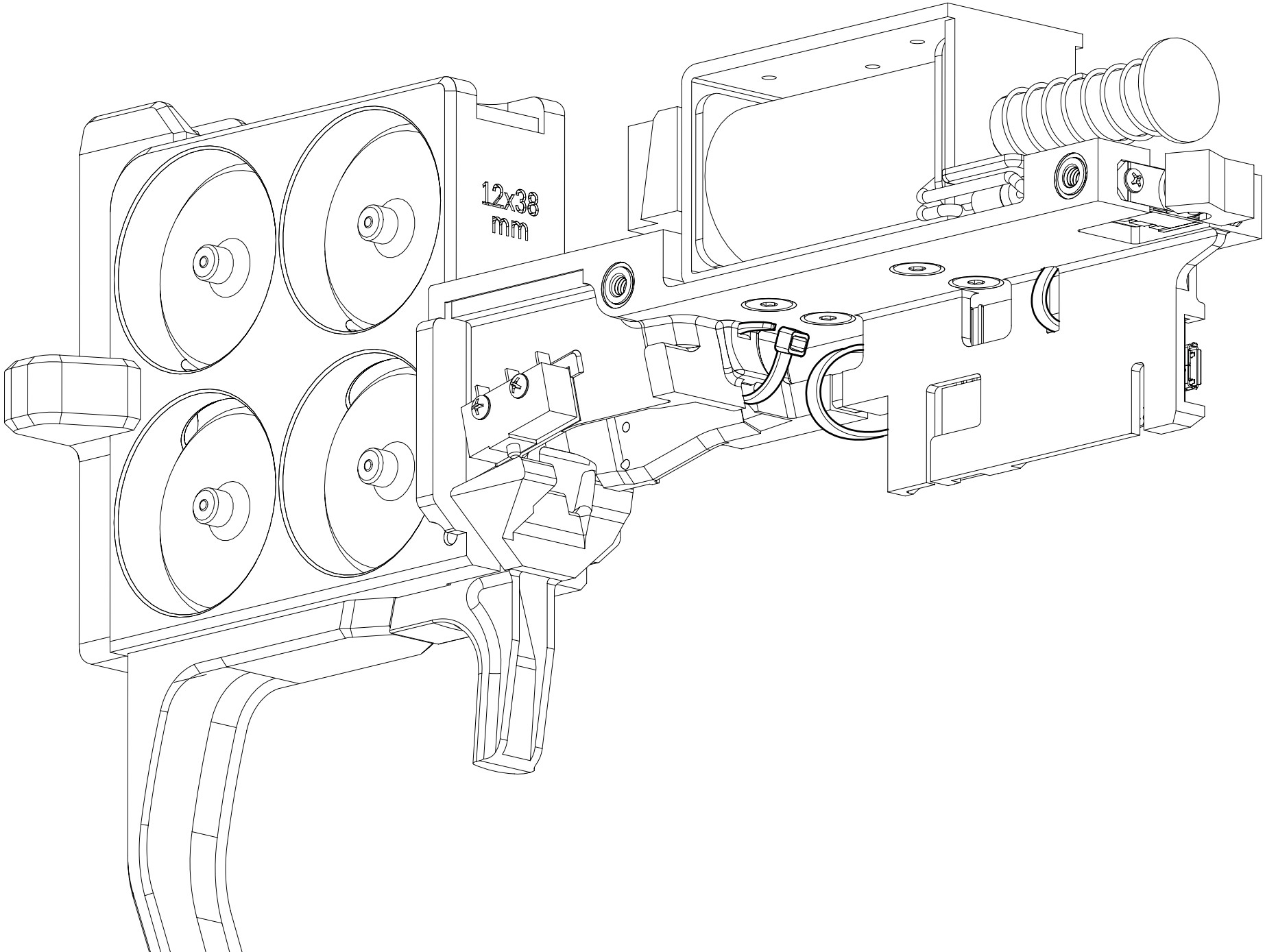

04 assembly

DART STRIKER + SLIDE

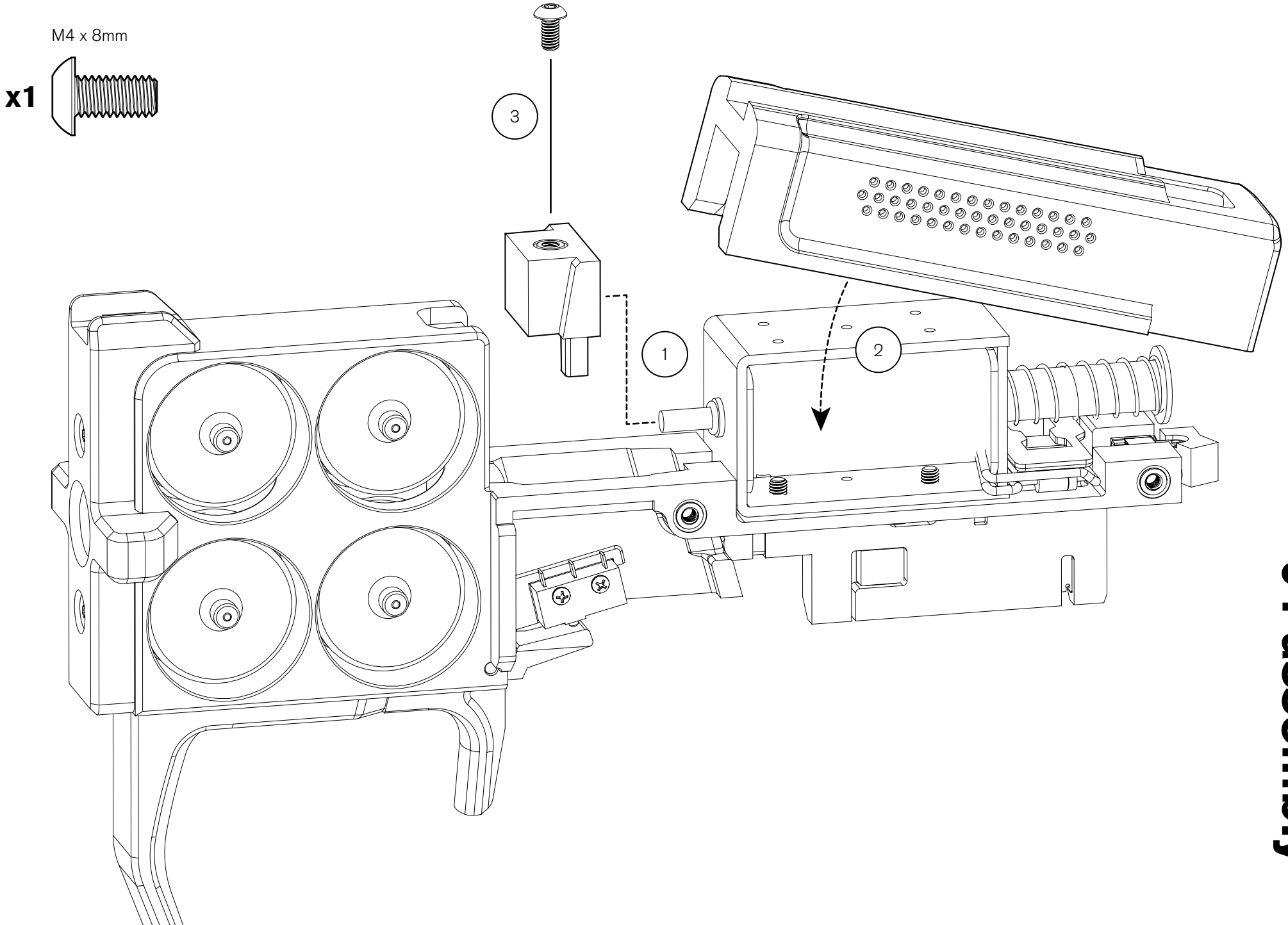

04 assembly

FRAME + SIGHT RAIL + BATTERY DOOR

M3 x 8mm

x1

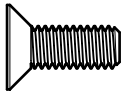

M3 x 18mm

x1

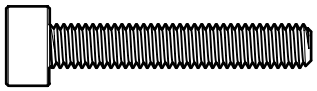

M4 x 8mm

x4

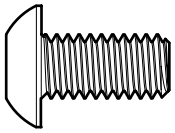

M3 x 6mm Thumbscrew

x1

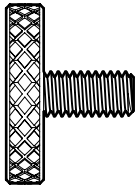

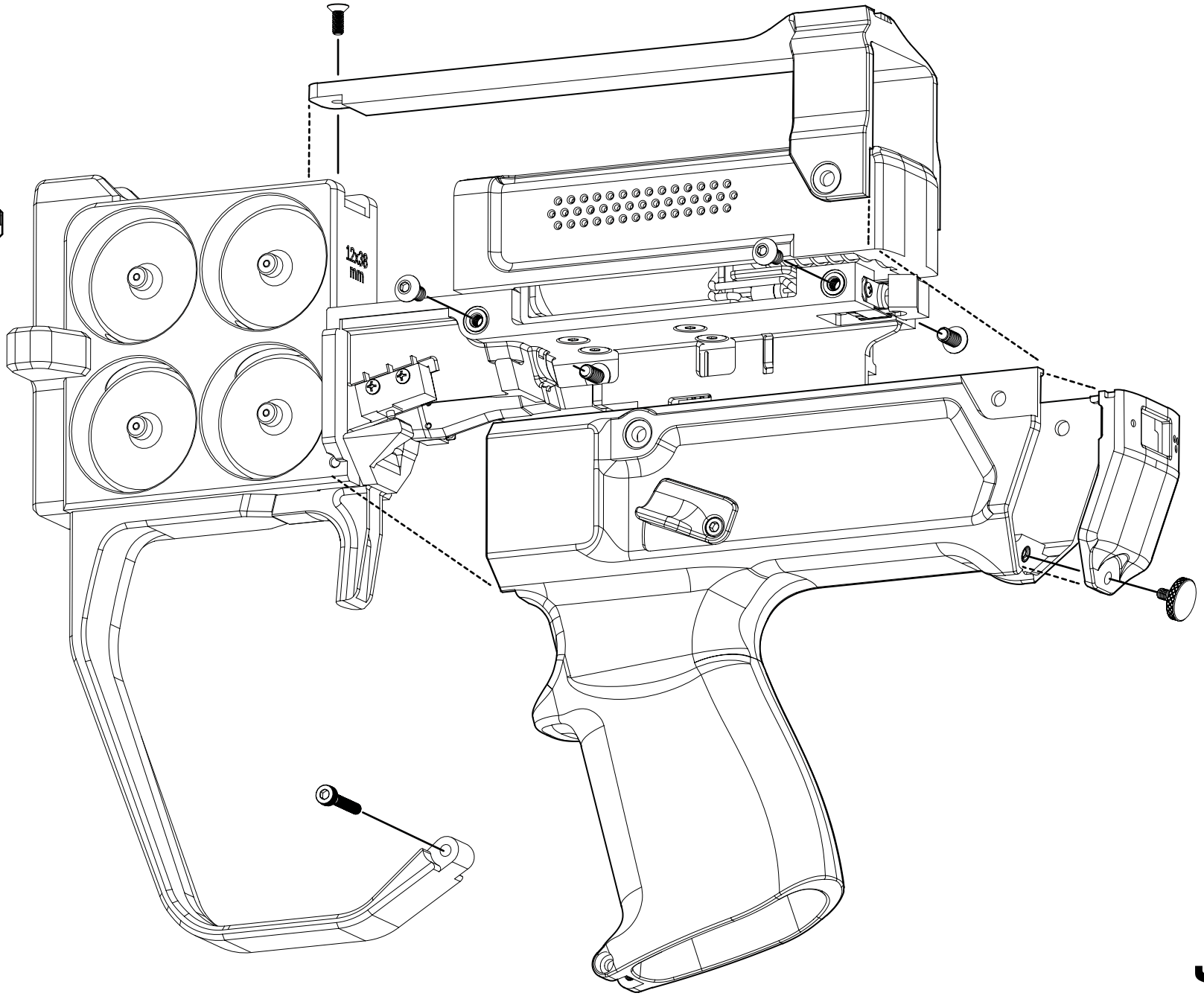

04 assembly